LiFePO4 BATTERY

PRODUCT SPECIFICATION

12.8V | 200Ah

2,560 Wh nominal energy

RV SERIES

Lithium iron phosphate battery with built-in battery management, Bluetooth communication and low-temperature heating.

Battery Pack Specification

1. Overview

ROCKSOLAR RV series batteries use an ABS enclosure designed for impact resistance, insulation, easy installation and maintenance-free operation. Applications include RVs, solar street lights and small energy storage systems. This specification covers the 12.8V 200Ah battery identified by the model reference shown in this document.

2. Features

- Lithium iron phosphate (LFP) cells.
- Built-in BMS for voltage, current, temperature and cell balancing.
- Bluetooth communication and low-temperature heating.
- CAN and RS485 communication ports.
- Design life greater than 15 years at 25°C.
- More than 6,000 cycles at 0.5C, 80% depth of discharge and 25°C.
- Stable performance and maintenance-free operation.

3. Product Drawing



4. Battery module specification

Item		Specification	Conditions
Nominal	Voltage	12.8V	25℃,0.2C
	Capacity	200Ah	
Module weight		23.5kg	±1kg
Dimensions(W*D*H), mm		460*220*213	±1mm
Operating parameters	Charging Voltage	14.0V~14.4V	
	Discharging Voltage	10.0V	
	Charging current	Max constant charge: 150A	Recommended 60A
	Discharging current	Max constant discharge: 150A	
Temperature	Charge range	-20℃~45℃	(<0℃, start heating)
	Discharge range	-20℃~55℃	
	Storage range	-20℃~45℃	
BMS	Built-in BMS	Voltage, current, temperature management & cell balance	RS485,CAN communication
Service life	Design life	>15years	25℃
	Cycle life	>6000 times, 0.5C, 80%DOD	

5. View Drawing

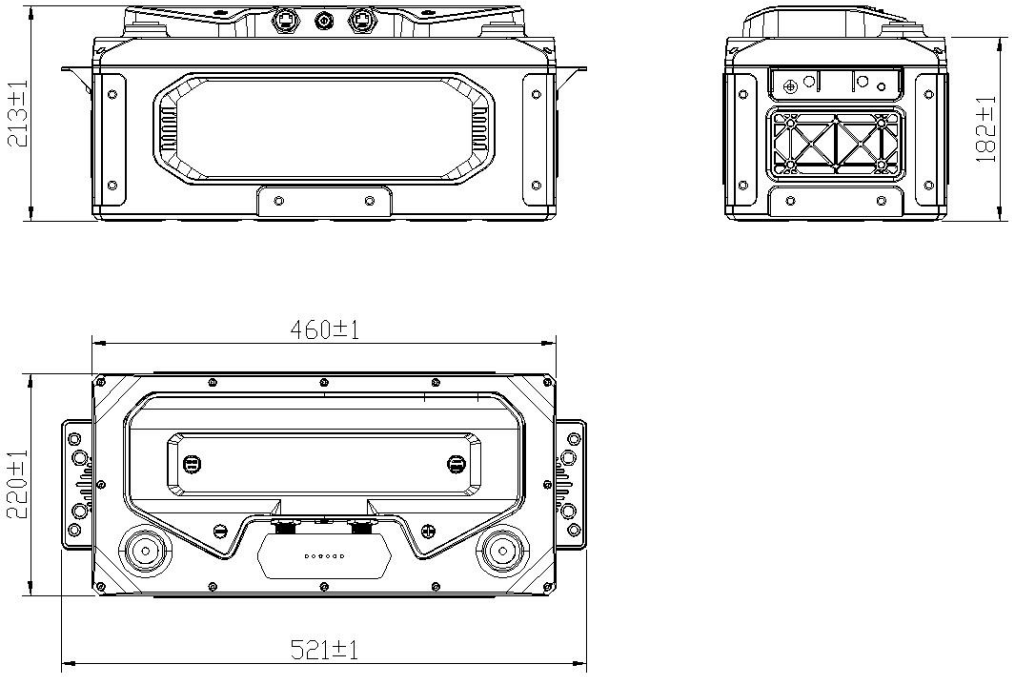

6. Panel Description

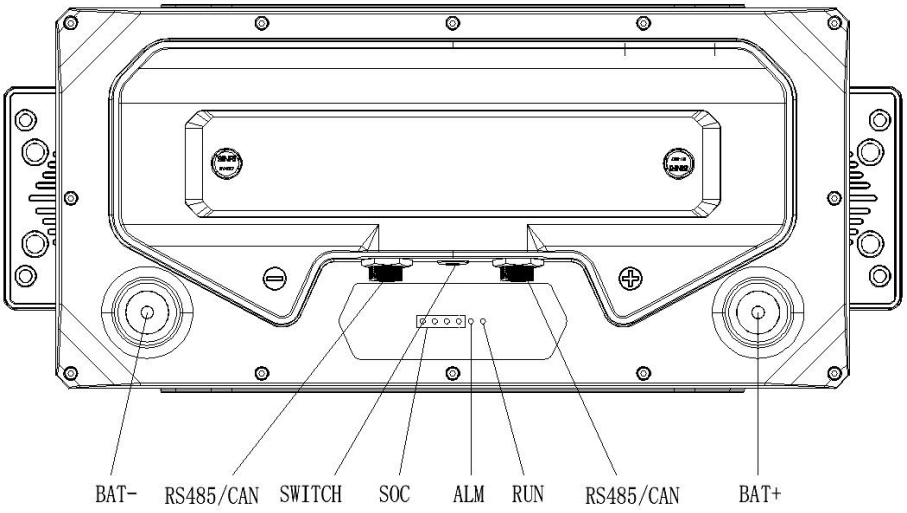

7. BMS specification

Item		Parameters		Condition
Charge	Cell voltage protection	3.8V	Delay 1s	Recovery at 3.45V
	Module voltage protection	15.2V	Delay 1s	Recovery at 13.8V
	Over charging current 1	>160A	Delay 2s	
	Temperature protection	<-5℃ or >70℃	Delay 1s	Recover when >0℃ or <60℃
Discharge	Cell voltage protection	2.3V	Delay 1s	Recovery at 3.0V
	Module voltage protection	10.0V	Delay 1s	Recovery at 12.8V
	Over discharging current 1	> 160A	Delay 30s	Recovery in 60s
	Over discharging current 2	> 500A	Delay 1.28s	Recovery in 60s
	Short circuit	>1000A	< 0.4mS	
	Temperature protection	<-20℃ or >75℃	Delay 1s	Recover when >-10℃ or <65℃
BMS	PCB Temp protection	>90℃	Delay 1s	Recover when <70℃
	Cell balance	130mA	Passive balance	Cell voltage difference > 40mV
	Temperature accuracy	3%	Cycle measurement	Measuring range -40~100℃
	SOC	5%		Integral calculation
	Power consumption with different condition	<300uA	Switch-off mode	Storage & transportation
		<20mA	Operating mode	Charging &discharging
	Communication ports	CAN、RS485、Bluetooth		

8. Battery module performance Curve

Discharge perfomance with different rate @ 25°C

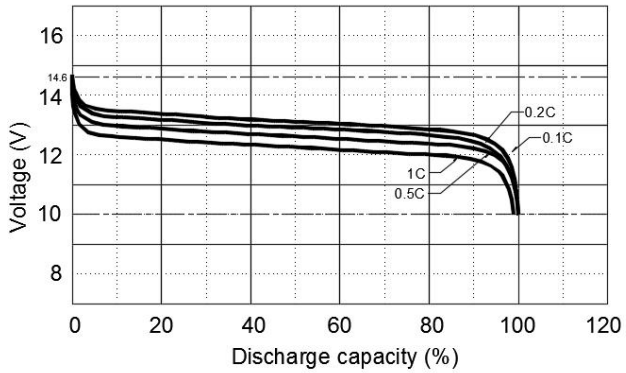

Charge & Discharge curve with 0.5C @ 25°C

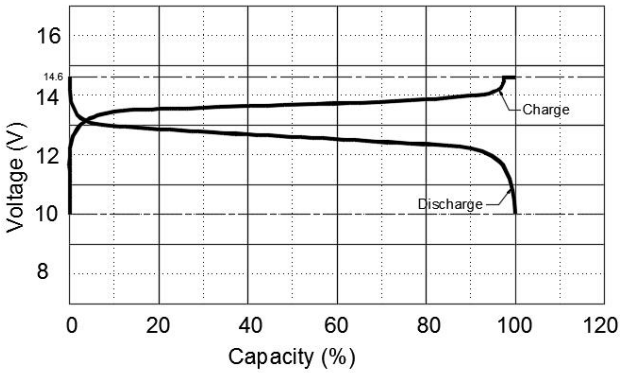

Discharge capacity with different temperature @ 0.5C

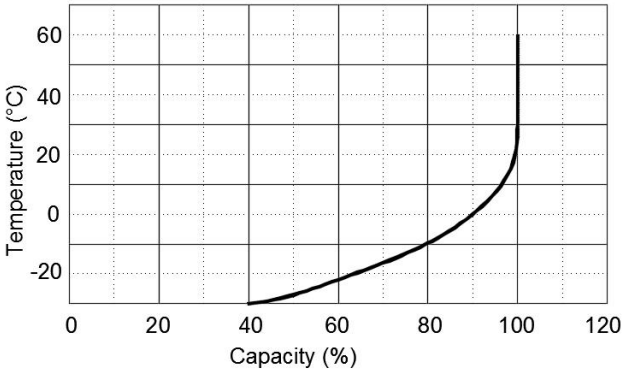

Cycle life with DOD @ 0.5C，25°C

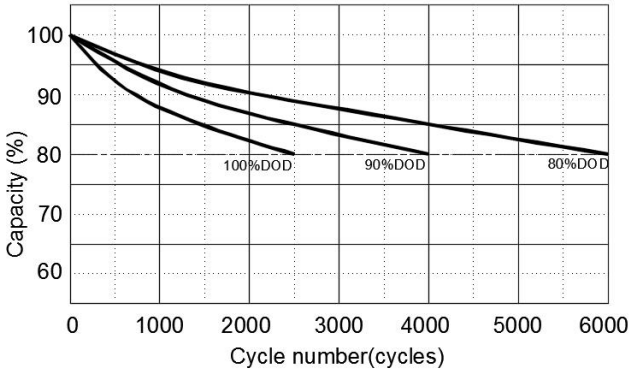

Self-discharge @ different temperature

